DYNAMIC CLASS 1500 16 Oz. or 20 Oz. COPPER
1 1/2" MECHANICAL SEAM x 12" or 16" WIDE ROOF PANEL
OVER 1/2" PLYWOOD

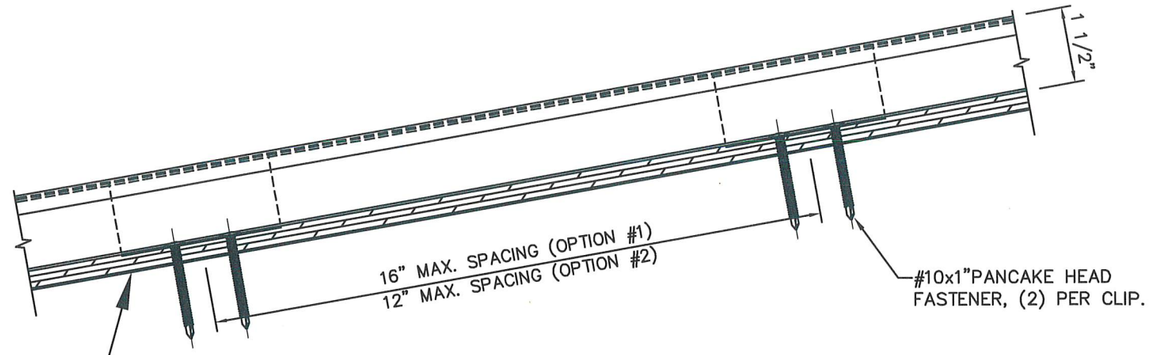

SECTION A–A

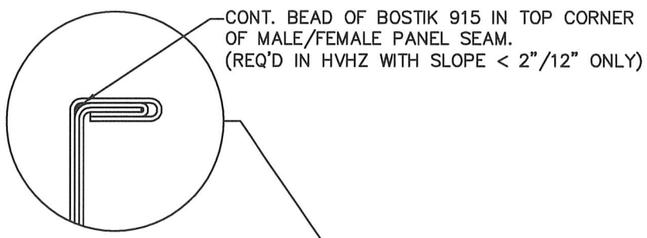

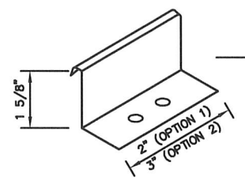

26 Ga. STAINLESS
STEEL CLIP

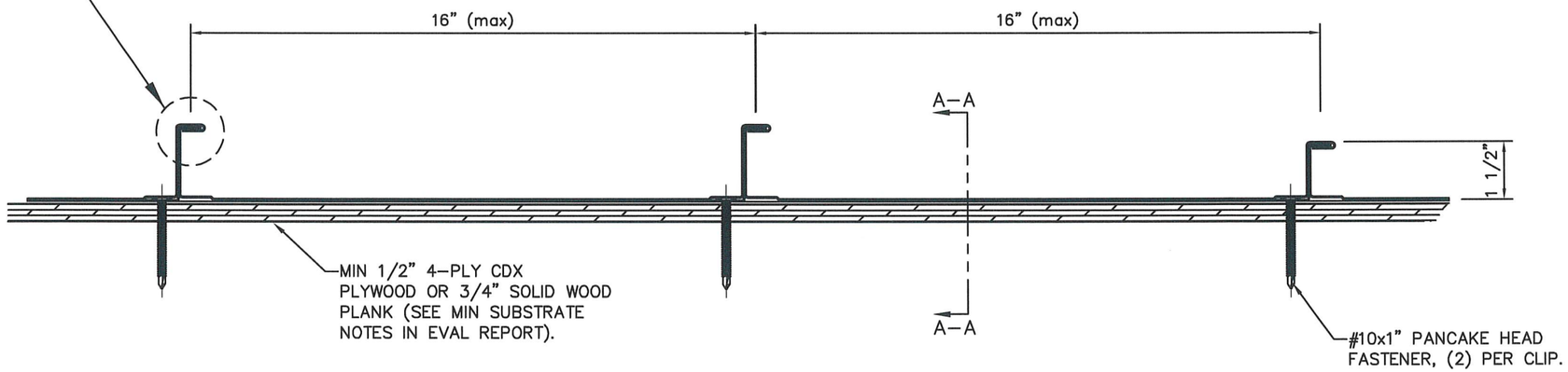

MAX DESIGN PRESSURE
–149 Psf (OPTION #1)
–198.5 Psf (OPTION #2)

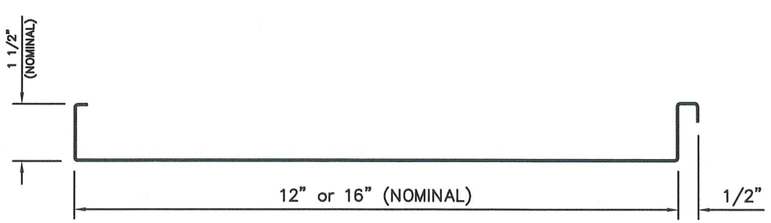

PANEL PROFILE

GENERAL NOTES:

1. ROOF SLOPE IS LIMITED PER THE REQUIREMENTS OF FBC SECTION 1507.4.2 or 1515.2.
2. DESIGN OF SUBSTRATE IS BY OTHERS AND NOT A PART OF THIS APPROVAL.
3. ALL PANEL SYSTEM PERIMETERS, PENETRATIONS, AND TRANSITIONS TO BE FLASHED AND SEALED PER THE REQUIREMENTS OF RAS 133.

REV.#	DATE
1	1/24/24
–	10/14/22

2023 CODE UPDATE
1ST SUBMITTAL
PRINTS ISSUED FOR

SEAL: SCOTT WOLTERS LICENSE No 62354 STATE OF FLORIDA PROFESSIONAL ENGINEER JAN 24 2024

SCOTT WOLTERS
FL PE# 62354

WOLTERS ENGINEERING
(COA# 27194)
15211 97TH ROAD N
WEST PALM BEACH, FL 33412
(561) 225-1982

DYNAMIC METALS

2951 SE DOMINICA TERRACE
STUART, FL 34997
PH: (772) 247-2465
FAX: (772) 247-2466

2177 ANDREWS LANE
FT. MYERS, FL 33912
PH: (239) 265-1638

www.dynamicmetal.net
EMAIL: info@dynamicmetal.net

DWG: 15CMS16–HZ
SHEET: 1/1