DYNAMIC CLASS 1750 0.032", 0.040", or 0.050" ALUMINUM
1 3/4" SNAPLOCK x 12", 14", 16", or 18" WIDE ROOF PANEL
OVER 1/2" PLYWOOD

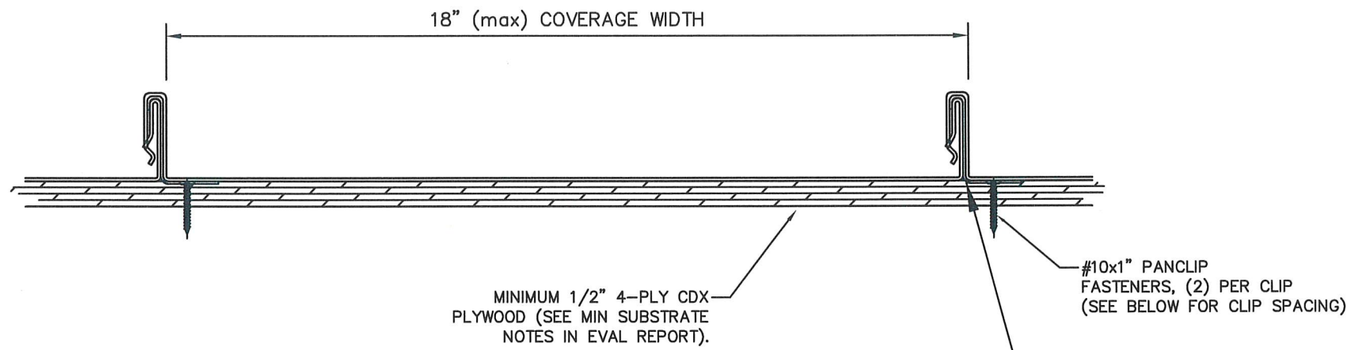

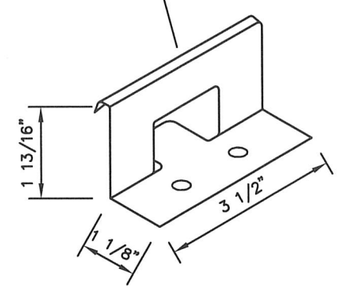

18 Ga. GALVANIZED STEEL CLIP

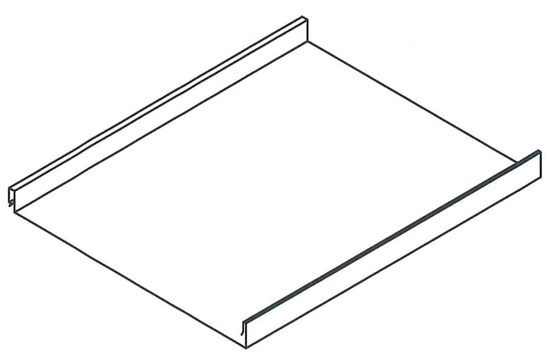

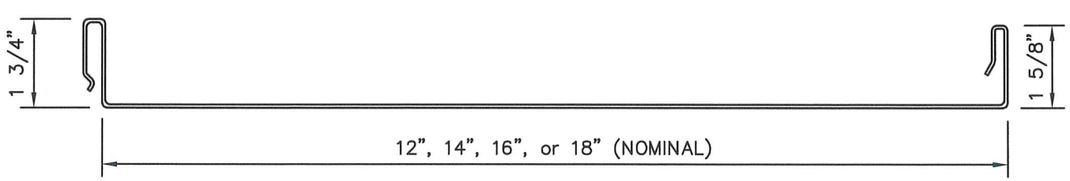

PANEL PROFILE

MAX DESIGN PRESSURE	
CLIPS SPACED 16" O.C:	-147.5 Psf
CLIPS SPACED 8" O.C:	-191 Psf

GENERAL NOTES:

1. ROOF SLOPE IS LIMITED PER THE REQUIREMENTS OF FBC SECTION 1507.4.2 or 1515.2.
2. DESIGN OF SUBSTRATE IS BY OTHERS AND NOT A PART OF THIS APPROVAL.
3. ALL PANEL SYSTEM PERIMETERS, PENETRATIONS, AND TRANSITIONS TO BE FLASHED AND SEALED PER THE REQUIREMENTS OF RAS 133.

PRINTS ISSUED FOR	REV.#	DATE
2023 CODE UPDATE	1	2/17/24
1ST SUBMITTAL	–	10/14/22

SCOTT WOLTERS ENGINEERING
SEAL: STATE OF FLORIDA PROFESSIONAL ENGINEER No 62354
FEB 17 2024

SCOTT WOLTERS
FL PE# 62354

WOLTERS ENGINEERING
(COA# 27194)
15211 97TH ROAD N
WEST PALM BEACH, FL 33412
(561) 225-1982

DYNAMIC METALS

2951 SE DOMINICA TERRACE
STUART, FL 34997
PH: (772) 247-2465
FAX: (772) 247-2466

2177 ANDREA LANE
FORT MYERS, FL 33912
PH: (239) 265-1638

www.dynamicmetal.net
EMAIL: info@dynamicmetal.net

DWG: 17ASL18-HZ
SHEET: 1/1